HRL Series

HRL12-520W 12V135Ah

Sacred Sun HRL batteries adopt new appearance and constructure design, automaticly welding+throug the partition welding+heat sealing technolgy, full automatic production process with good consistency. It has excellent high power discharge, long floating backup time and fast charging performance. It can be widely used in data center, UPS, IDC room.

Benefits

- Very long life according to EUROBAT Classification
- High power density, 30% higher than ordinary batteries
- Special lead paste formual and additives improve the battery service life
- Maximum charge efficiency
- Low self-discharge rate
- Wide range of power, easy sizing of batteries
- Easy installation and handling

Applications

- Data center
- UPS
- IDC room
- Emergency power
- HVDC system

Standards

- IEC 60896-21/22
- JIS C8704-1/2
- EUROBAT guide

Drawing

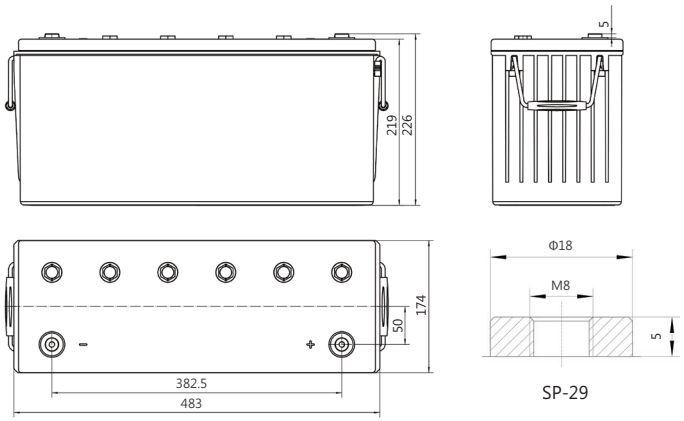

Specifications

Battery Model	HRL12-520W			
Design Life (years, 25℃)	15			
Capacity (Ah, 25℃)	10min (1.60V)	15min (1.67V)	1HR (95.7A, 1.70V)	10HR(13.5A, 1.80V)
	685	520	95.7	135
Dimensions (mm)	Length	Width	Height	Total Height
	483	174	219	226
Approx. Weight (kg)	44.4			
Reference Internal Resistance (mΩ)	2.6 (fully charged @ 25℃)			
Maximum Discharge Current (A/3 Sec.)	1550			
Self-Discharge (25℃)	≤2% per month			
Charge Voltage (V/cell, 25℃)	Cycle use		Float use	
	2.35(-3.5mV/℃/cell), max charge current: 33.75A		2.25 (-3.5mV/℃/cell)	
Short Circuit Current (A)	4100			

Discharge Data

Constant Power Discharge Data (25℃, W/cell)																
End Voltage (V/cell)	min							h								
	5	10	15	20	25	30	45	1	1.5	2	3	4	5	6	8	10
1.60	895	685	531	454	394	331	251	191	143	107	78.6	59.6	50.9	43.9	34.7	28.6
1.65	880	676	525	449	389	326	248	189	142	107	78.2	59.2	50.6	43.6	34.5	28.4
1.67	872	668	520	444	384	321	246	188	141	106	77.8	59.0	50.4	43.5	34.4	28.3
1.70	861	660	513	438	378	315	243	186	140	106	77.4	58.6	50.1	43.2	34.2	28.1
1.75	835	641	496	423	364	301	236	182	138	104	76.3	57.7	49.5	42.7	33.7	27.7
1.80	799	618	476	405	347	285	228	177	134	102	75.0	56.7	48.7	42.0	33.2	27.2

Constant Current Discharge Data (25℃, A)																
End Voltage (V/cell)	min							h								
	5	10	15	20	25	30	45	1	1.5	2	3	4	5	6	8	10
1.60	524	389	298	250	214	176	132	99.2	74.3	55.5	40.5	30.7	26.1	22.4	17.7	14.5
1.65	515	382	293	246	210	173	130	98.0	73.5	55.0	40.1	30.4	25.9	22.2	17.5	14.4
1.67	508	377	288	242	207	170	129	97.0	72.8	54.6	39.9	30.1	25.7	22.1	17.4	14.3
1.70	498	371	282	237	202	166	127	95.7	71.9	54.0	39.5	29.8	25.5	21.9	17.3	14.2
1.75	477	355	269	226	192	157	122	92.6	69.9	52.8	38.6	29.2	24.9	21.5	16.9	13.9
1.80	452	338	253	213	181	146	116	89.1	67.5	51.3	37.6	28.4	24.3	20.9	16.5	13.5

Performance Curve

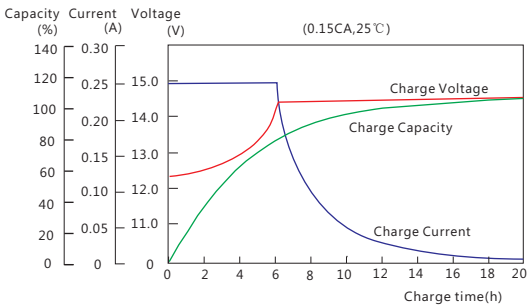

Charge performance

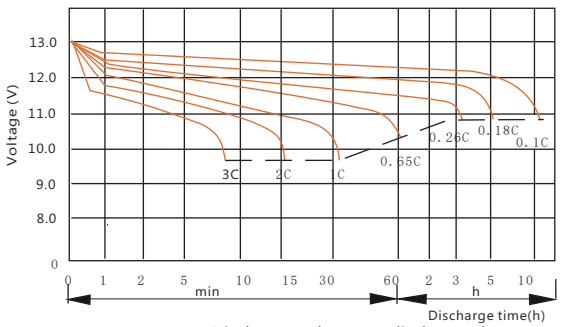

Discharge voltage vs. discharge time

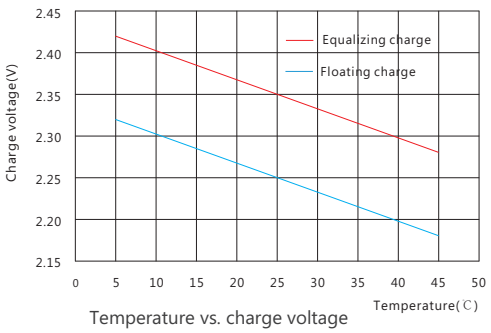

Temperature vs. charge voltage

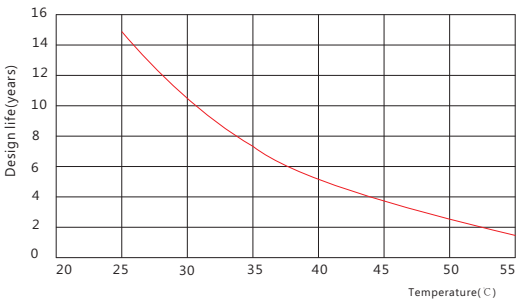

Design life vs. temperature

Sacred Sun Power Sources Co., Ltd.
Add: No.1 Shengyang Road, Qufu 273100 PRC
Tel: +86-537-4422313 Fax: +86-537-4411980
Email: sales@sacredsun.cn

Sacred Sun Hong Kong Co., Limited
Add: RM 19C Lockhart CTR 301-307 Lockhart RD Wan Chai, Hong Kong
Email: admin.hk@sacredsun.hk

Sacred Sun Asia Pacific Pte Ltd.
Add: 1 Ubi View, #04-12, Focus One, Singapore 408555
Email: admin.sg@sacredsun.sg

Sacred Sun Europe SARL
Add: ZAE Fontaine, 33210 Fargues, France
Email: admin.eu@sacredsun.eu

Sacred Sun MEA FZE
Add: No. 311 office, Building LOB 14, JAFZA, Dubai, UAE
Email: admin.ae@sacredsun.ae

ISO9001 ISO14001 ISO18001 SA8000